SL-505/80DFC/Z102/RB

[mm]

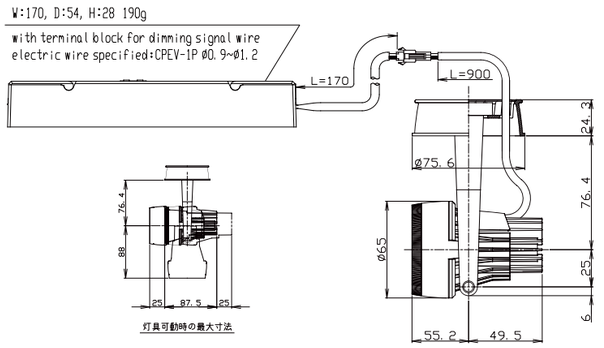

Weight

0.41kg

Rotate degrees

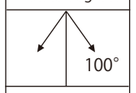

Light Source LED module
Dedicated Driver Constant Current
Driver
Input Voltage 220V/240V±6% 50Hz/60Hz
Input Current 0.089A/0.087A
Power Consumption 16.8W/17.0W
Dimming method 0-10V
Fixture
Input Voltage 19.5V
Input Current 0.7A
Dimmer
SR-2830AS-1-10V

OPTION

Full diffuser lens	MLA-080/DF01
Semi diffuser lens	MLA-080/DS03
Full spread lens	MLA-080/SF01
Semi spread lens	MLA-080/SS01
Edge control filter	MLA-080/EC02

ModuleX

Installation Guide | Lighting Fixture

SL-505/80DFC/Z102/RB

To install the fixture safely 《 Read carefully and follow all the instructions in the guide 》

⚠ Warning : Failure to install the fixture properly could result in persona l injury. ⊘ : Prohibited

⚠ Caution : Failure to install the fixture properly could result in property damage. ❗ : Strict observance

Before installation	⚠ Warning	⊘	The fixture is for indoor use only in general conditions.This fixture can only be installed on a horizontal ceiling. Can not be used following conditions (Causes of falling, electrocution and fire) ●On the wall ●Plases affected by wind or air-conditioner mashine ●On the floor ●Inclined, uneven surface ●Outside ●Ambient temperature under 0℃ and over 35℃ ●Near fire ●Ceiling which can't hold the fixture weight ●High humidity ●Dusty areas, corrosive gas outbreaks areas ●Areas get direct sunlight ●Vibrated or shocked areas Please contact if you are not able to judge whether installation environment is suitable to the places or not. ●Insulated inside of ceiling 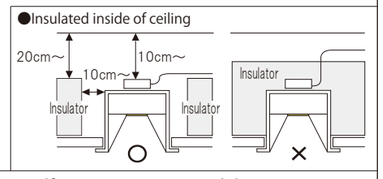
	⚠ Caution	❗	Even when using it indoors, do not use it in a place where there is a sulfur component around the equipment. (Sulfur components may also be contained in some foods, chemicals, papers, rubber products, and car exhaust gas.)
		❗	Please follow the fixtures' indication or specification for the distance of irradiated area. (Causes of change in shape, change in color of irradiated objects)
		❗	Carefully check the size of the lighting fixtures and secure sufficient space in the ceiling.
For electric wiring	⚠ Warning	❗	Only qualified person may work on electric wiring and equipment.(Cause of accidents)
		❗	Please use a compatible power supply and compatible driver. (Cause of non-lighting / fire)
		❗	Be sure power supply voltage is within ±6% mentioned in rating plate or the guide. (Causes of short life of lamps・electrification・fire)
		❗	Be sure all the wires and codes are not damaged. (Causes of falling・damage)
		⊘	Do not perform live-line construction. There is a risk of electric shock or product failure.
		⊘	Do not install other electronic devices (devices that use a motor such as a ventilation fan) in the same circuit as it may lead to equipment failure.
At lighting fixture installation	⚠ Warning	❗	Please follow the fixtures' instruction or this guide to installthe fixture and lamp. (Causes of falling・electrification・fire)
		❗	Models equipped with a safety wire (fall prevention wire) as standard equipment to prevent falling due to an earthquake, etc. Be sure to install it securely according to this manual.
		❗	Be sure to turn off the power when installing the fixture or lamp. (Cause of electric shock)
		⊘	Do not touch the fixture when switch is on or just turn off the switch because of high temperature.
		⊘	Do not put or cover the fixture by any cloths, papers, or insulators.(Causes of not lighting・fire)
		⊘	Do not put metal or burning objects in the gaps of the equipment. (Causes of electric shock, fire, and equipment failure)
		❗	Make sure that the outer shell of the main body other than the equipment mounting part does not come into contact with equipment such as construction materials and ducts inside and outside the ceiling. (Causes of falling, electric shock, and fire)
		⊘	Do not dismount or remodel fixtures. (Cause of electrification・fire・falling・broken fixtures)
		⊘	Do not operate with wet hands.
		⊘	Do not grab and lift wires or cables that are not the product itself. It may be damaged.
		❗	If you smell smoke, see smoke, or find anything unusual, please turn the switch off and ask construction companies to repair. (Cause of electrification・fire)
	⚠ Caution	❗	Use protective equipment such as clean gloves when installing and removing equipment. (Cause of injury)
		❗	Install so that the heat of the equipment does not affect the fire protection equipment such as sprinklers. (Cause of malfunction)
		❗	Please note that noise may enter the device if it is lit near a communication device such as a radio.

SL-505/80DFC/Z102/RB

Installation Details	Installation Diagram	Caution
1 Connect the bundled dedicated Driver to the connector of Luminaire 2 Please connect according to the description of the power supply. 3 Install a dedicated driver on the ceiling ⚠ Be sure to turn off the power before working ⚠a Connect the connector securely. If you remove it pull while holding the lock. Do not connect or disconnect the connector while the power is on. (Cause of trouble) ⚠ Do not touch the metal terminals on the inside of the connector directly with your hands.	Wiring diagram AC Power 50/60Hz NTC-SRP-2007-30CC LIGHTING FIXTURE 0/1-10V Control Unit Dips to set the operation current 1 2 3 4 ⚠ Do not change settings	⚠a Driver side Lock Luminaire side
Installation to ceiling 1 Install the safety wire to the mounting frame. 2 Install the fixture to the mounting frame. ⚠ Make sure the fixture will not touch any objects in ceiling.	1 Ceiling Mounting frame fixture	

To install ModuleX safety

Installation Details	Installation Diagram	Caution
Optional parts installation 1 Remove 30 degree hood 2 Remove the filter fixing ring attached to the body 3 Put the lens filter in the hood 30 degrees and fix it with the filter fixing ring 4 Attach 30 degrees hood firmly to the main body ⚠b Be careful not to drop the filter when removing the hood	hood filter fixing ring 1 2 body lens filter (optional) body filter fixing ring lens filter 30 dgree hood	⚠b filter fixing ring lens filter (up to 1) hood ■Filter has a distinction between front and back. Refer to the filter installation manual.

ModuleX
TOKYO
#21 AraiBldg, 1-20-6 Ebisu-Minami
Shibuya-ku, Tokyo, 150-0022, Japan
Tel +81-3-5768-3681
OSAKA
3-3-9 Kyutaromachi Chuo-ku Osaka-shi, Osaka
541-0056, Japan
Tel +81-3-6261-7888
FUKUOKA
1-8-30-1 Daimyo, Chuo-ku, Fukuoka
810-0041, Japan
Tel +81-92-732-4211