SL-910DF/Z102/RB

[mm]

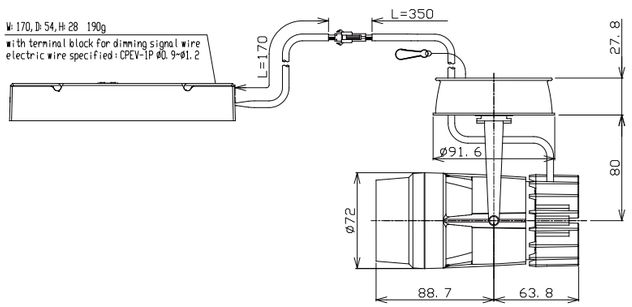

Weight

700g

(Driver weight is included)

Rotate degrees

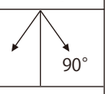

Light Source LED module

Dedicated Driver Constant Current

Driver

Input Voltage	220V/240V±6% 50Hz/60Hz
Input Current	0.155A/0.143A
Power Consumption	30.7W/30.9W
Dimming method	0-10V

Fixture

Input Voltage	38.6V
Input Current	0.7A

Dimmer

SR-2830AS-1-10V

OPTION(1 filter attachable)

Diffusion lens	SA-3DL03
Wide Diffusion lens	SA-3DF01
Spread lens	SA-3SP01
Honeycomb louver	SA-3HCO2
Conversion filter	SA-3CV02~03
Edge control filter	SA-3EC01
Sharpener (available only for narrow distribution)	SA-3SH01 (Discountinued)

CREATED DATE 28 Dec. 2018 REVISION DATE 11th Apr. 2024

ModuleX

TOKYO
#21 AraiBldg, 1-20-6 Ebisu-Minami
Shibuya-ku, Tokyo, 150-0022, Japan
Tel +81-3-5768-3681

OSAKA
3-3-9 Kyutaromachi Chuo-ku Osaka-shi, Osaka
541-0056, Japan
Tel +81-3-6261-7888

FUKUOKA
1-8-30-1 Daimyo, Chuo-ku, Fukuoka
810-0041, Japan
Tel +81-92-732-4211

ModuleX

Installation Guide | Lighting Fixture

SL-910DF/Z102/RB

To install the fixture safely 《 Read carefully and follow all the instructions in the guide 》

⚠ Warning : Failure to install the fixture properly could result in persona l injury.	⊘ : Prohibited
⚠ Caution : Failure to install the fixture properly could result in property damage.	❗ : Strict observance

Before installation	⚠ Warning	⊘	The fixture is for indoor use only in general conditions.This fixture can only be installed on a horizontal ceiling. Can not be used following conditions (Causes of falling, electrocution and fire) ●On the wall ●Plases affected by wind or air-conditioner mashine ●On the floor ●Inclined, uneven surface ●Outside ●Ambient temperature under 0℃ and over 35℃ ●Near fire ●Ceiling which can't hold the fixture weight ●High humidity ●Dusty areas, corrosive gas outbreaks areas ●Areas get direct sunlight ●Vibrated or shocked areas Please contact if you are not able to judge whether installation environment is suitable to the places or not. ●Insulated inside of ceiling 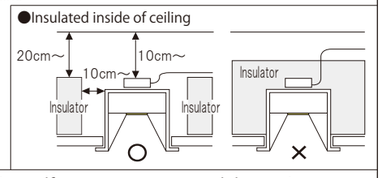
	⚠ Caution	❗	Even when using it indoors, do not use it in a place where there is a sulfur component around the equipment. (Sulfur components may also be contained in some foods, chemicals, papers, rubber products, and car exhaust gas.)
		❗	Please follow the fixtures' indication or specification for the distance of irradiated area. (Causes of change in shape, change in color of irradiated objects)
		❗	Carefully check the size of the lighting fixtures and secure sufficient space in the ceiling.
For electric wiring	⚠ Warning	❗	Only qualified person may work on electric wiring and equipment.(Cause of accidents)
		❗	Please use a compatible power supply and compatible driver. (Cause of non-lighting / fire)
		❗	Be sure power supply voltage is within ±6% mentioned in rating plate or the guide. (Causes of short life of lamps・electrification・fire)
		❗	Be sure all the wires and codes are not damaged. (Causes of falling・damage)
		⊘	Do not perform live-line construction. There is a risk of electric shock or product failure.
		⊘	Do not install other electronic devices (devices that use a motor such as a ventilation fan) in the same circuit as it may lead to equipment failure.
At lighting fixture installation	⚠ Warning	❗	Please follow the fixtures' instruction or this guide to installthe fixture and lamp. (Causes of falling・electrification・fire)
		❗	Models equipped with a safety wire (fall prevention wire) as standard equipment to prevent falling due to an earthquake, etc. Be sure to install it securely according to this manual.
		❗	Be sure to turn off the power when installing the fixture or lamp. (Cause of electric shock)
		⊘	Do not touch the fixture when switch is on or just turn off the switch because of high temperature.
		⊘	Do not put or cover the fixture by any cloths, papers, or insulators.(Causes of not lighting・fire)
		⊘	Do not put metal or burning objects in the gaps of the equipment. (Causes of electric shock, fire, and equipment failure)
		❗	Make sure that the outer shell of the main body other than the equipment mounting part does not come into contact with equipment such as construction materials and ducts inside and outside the ceiling. (Causes of falling, electric shock, and fire)
		⊘	Do not dismount or remodel fixtures. (Cause of electrification・fire・falling・broken fixtures)
		⊘	Do not operate with wet hands.
		⊘	Do not grab and lift wires or cables that are not the product itself. It may be damaged.
		❗	If you smell smoke, see smoke, or find anything unusual, please turn the switch off and ask construction companies to repair. (Cause of electrification・fire)
	⚠ Caution	❗	Use protective equipment such as clean gloves when installing and removing equipment. (Cause of injury)
		❗	Install so that the heat of the equipment does not affect the fire protection equipment such as sprinklers. (Cause of malfunction)
		❗	Please note that noise may enter the device if it is lit near a communication device such as a radio.

SL-910DF/Z102/RB

	Installation Details	Installation Diagram・Caution
	Optional parts installation 【Filter】	
1	Turn the hood.	
2	Put a filter in hood and put it back.	
a	The filter sandwiches it between hood and the fixture and is put on. A filter, please be careful not to drop on the occasion of desorption of hood.	
1	Connect the bundled dedicated Driver to the connector of Luminaire	
2	Please connect according to the description of the power supply.	
3	Install a dedicated driver on the ceiling	
	Be sure to turn off the power before working	
b	Connect the connector securely. If you remove it pull while holding the lock. Do not connect or disconnect the connector while the power is on. (Cause of trouble)	
	Do not touch the metal terminals on the inside of the connector directly with your hands.	

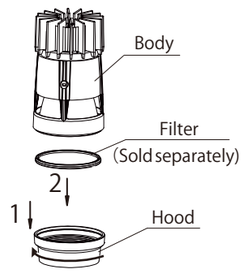

a

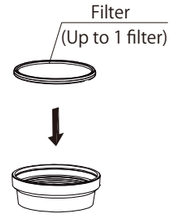

b

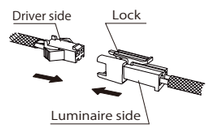

Wiring diagram

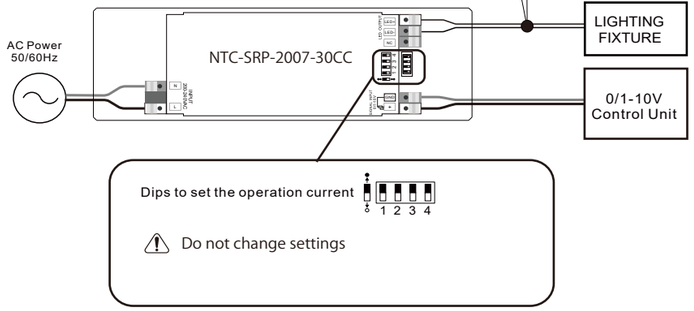

	Installation Details	Installation Diagram・Caution
	Installation to ceiling	
1	Install the safety wire to the mounting frame.	
2	Install the fixture to the mounting frame.	
c	Make sure to install the safety wire to the mounting frame securely.	
d	Use clean soft cloth to clean up and maintain inner side of the body. The description of a power supply.	
	Make sure the fixture will not touch any objects in ceiling.	

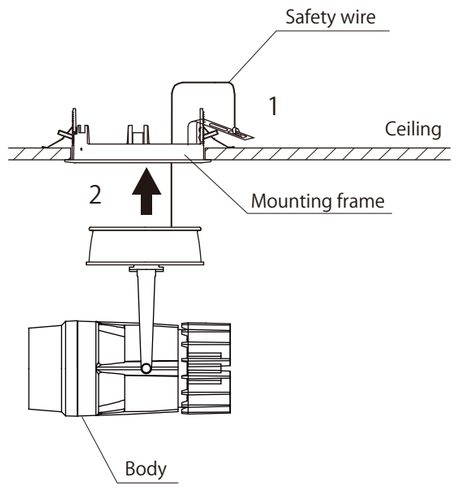

c

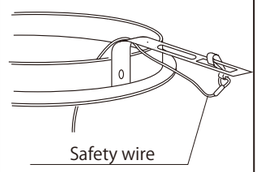
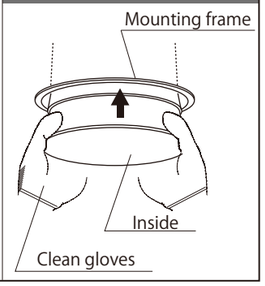
d