SERIES	FUNCTION	CAT, No.
ModuleX®80	DF Spotlight	SX-535/80DF/CE

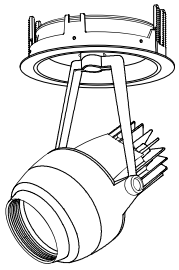

SPECIFICATION

- Body: White(WC), Matte Black(MC), Silver(SC)
- Mounting Frame: White(W), Matte Black(M)
- Light Distribution: Narrow(N)、Medium(M)、Wide(W)
- Vertical aiming angle: 100 degree
- Horizontal aiming angle: 360 degree
- Approved Driver: Constant current (Sold Separately)
- Fixture Input Voltage: 19.5V
- Fixture Input Current: 0.7A MAX
- Weight: 310g

PRODUCT CODE

SX-535/80DF/CE/N·M·W/R24B/WC·MC·SC/W
SX-535/80DF/CE/N·M·W/R27B/WC·MC·SC/W
SX-535/80DF/CE/N·M·W/R30B/WC·MC·SC/W
SX-535/80DF/CE/N·M·W/R35B/WC·MC·SC/W
SX-535/80DF/CE/N·M·W/R40B/WC·MC·SC/W

OPTION

Full diffuser lens	MLA-080/DF01
Semi diffuser lens	MLA-080/DS03
Full spread lens	MLA-080/SF01
Semi spread lens	MLA-080/SS01
Edge control filter	MLA-080/EC02

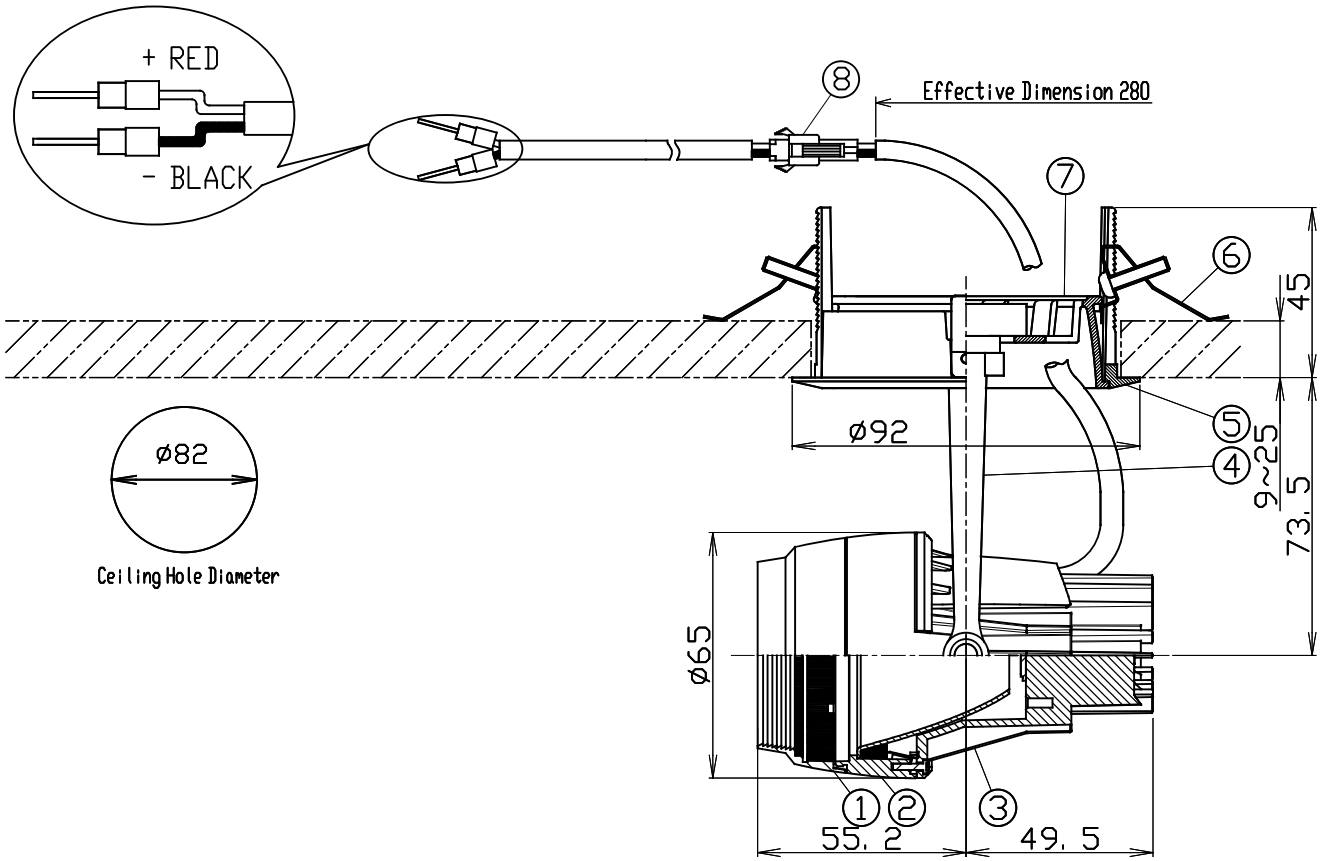

	PARTS	MATERIAL	REMARK
1	Filter Holder	ADC	Acrylic Baking Finish
2	Body	ADC	Acrylic Baking Finish
3	Heat conductive body	ADC	Acrylic Baking Finish
4	Arm	Resin	————
5	Unit Mounting Spring	ADC	Acrylic Baking Finish
6	Mounting Frame	Stainless Steel	————
7	Cone	ADC	Acrylic Baking Finish
8	Safety Connector	Resin	————

ATTENTION

- Use within 0℃~35℃ ambient temperature range
- Emission color and brightness would be different even within the same model.
- Danger! Do not remodel fixtures.
- Do not use fixture without hood.
- To remove heat, place an air hole when installing the fixture in a fitting.
  (Place air holes equally in the upper side of the fitting. Total aperture size should be more than 5% of the fitting's surface)
- Please use constant current driver.
- Keep distance of the fixtures and objects 0.1m or more.
- Please do not remove safety connector

ModuleX ModuleX Inc.	SPECIFICATION SHEET	SCALE 1/2	CREATED DATE 28/12/2017	REVISION DATE