SERIES	FUNCTION	CAT, No
ModuleX® 80	80 Trimless Frame	MMT-081/TLF/01

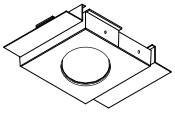

SPECIFICATION

- Frame — Material-origin color
- Weight — 220g

PRODUCT CODE

MMT-081/TLF/01

OPTION

Cover Plate — SX-CP080/White・Gray

The specification of this product is Japanese.

UNIT mm

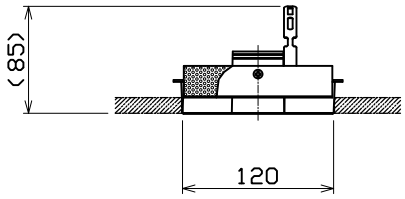

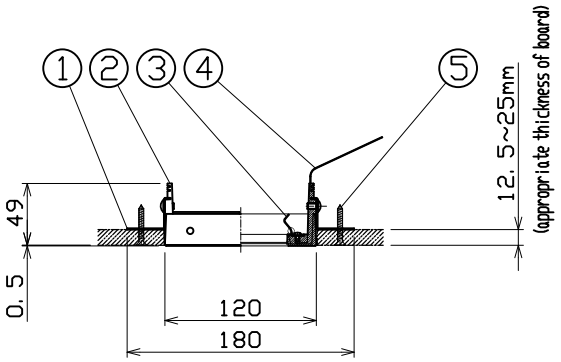

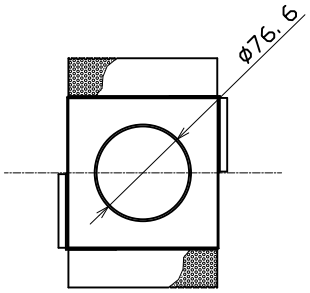

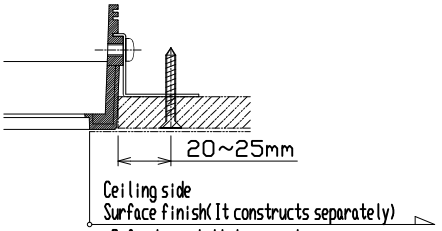

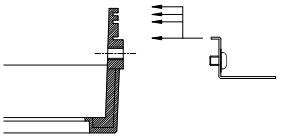

- The board is applied to following thickness by changing adjustment position.
  - ・12.5mm
  - ・9.5mm+12.5mm
  - ・9.5mm+9.5mm
  - ・12.5mm+12.5mm

Ceiling Cut Out
122×122

	PARTS	MATERIAL	REMARK
1	Attachment	Aluminum Punching	Material-origin color
2	Frame	ADC	Material-origin color
3	Spring for attaching fixture	Stainless	Material-origin color
4	Spring for hanging safety wire	Stainless	Material-origin color
5	Drilling tapped screw	Iron	Plating

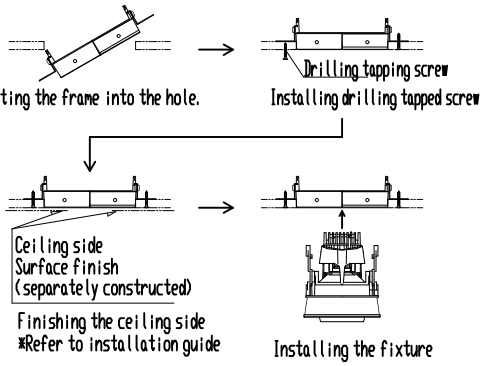

Attention

- Danger: Do not remodel fixtures.
- Do not cover the fixtures and ballast with the heat insulator etc.
- Use lawn for construction. If not, it will cause some crack.
- Refer to the installation guide for the construction method.
- Drilling tapped screw is bundled by a product.
- Make sure to use provided number of drilling tapped screws.
- Install the drilling tapped screws in the location of the 20-25mm from the edge of a box.
- Be accurate in dimensions of ceiling cut out.

ModuleX® ModuleX Inc.	SPECIFICATION SHEET	SCALE 1/6	CREATED DATE 29/02/2016	REVISION DATE